Available online at www.sciencedirect.com
SCIENCE DIRECT®
Talanta 61 (2003) 905–912
Talanta
www.elsevier.com/locate/talanta

On-line preconcentration of phosphate onto molybdate form anion exchange column

Tetsuyuki Taniai [a,*], Masaaki Sukegawa [b], Akio Sakuragawa [b], Atsushi Uzawa [a]

[a] Department of Chemistry, Chiba Institute of Technology, 2-1-1, Shibazono, Narashino, Chiba 275-0023, Japan
[b] Department of Materials and Applied Chemistry, College of Science and Technology, Nihon University, Kanda-Surugadai, Chiyoda, Tokyo 101-8308, Japan

Received 28 January 2003; received in revised form 13 June 2003; accepted 18 June 2003

Abstract

In this paper, we describe an automated flow injection system for measuring the concentration of phosphate based on a fluorescence quenching reaction between Rhoadamine 6G and phosphomolybdate with a preconcentration column, which was packed with a molybdate-form ion exchange resin to collect and preconcentrate the phosphate in the sample solution. Rhodamine 6G was chosen because the reaction with phosphomolybdate was fast and did not require heat. For the construction of a stable flow injection system, an aqueous methanol solution was used as the cleaning reagent to overcome the precipitation of ion-associated complexes between Rhodamine 6G and phosphomolybdate or Rhodamine 6G and molybdate. For the preconcentration and collection of the phosphate ions in a water sample, a preconcentration column, which was packed with a molybdate-form ion exchange resin, was combined with the proposed flow injection system and applied to natural water samples containing low concentrations of phosphate.
© 2003 Elsevier B.V. All rights reserved.

Keywords: Phosphate; Molybdate; Anion exchange

1. Introduction

The geochemical importance of phosphate has meant that its concentration and distribution in natural bodies of water have been investigated in some detail. The molybdenum blue method is most often used to measure levels of phosphate in such studies [1–6]. However, the procedure is troublesome, the sensitivity is not high enough for determinations in natural water samples, and the heating step is not suitable for combination with an FIA system. Consequently, attempts have been made at the preconcentration of phosphate [6–8]. To preconcentrate phosphate, solvent extraction [9,10] and solid phase extraction with an ion associate complex [11] were used. Several ion pair reagents have been reported such as Malachite Green [12,13], Crystal violet [14], Rhodamine

* Corresponding author. Tel.: +81-474-549-600; fax: +81-474-549-659.
E-mail address: tetuyukitani@pf.it-chiba.ac.jp (T. Taniai).

0039-9140/03/$ - see front matter © 2003 Elsevier B.V. All rights reserved.
doi:10.1016/S0039-9140(03)00382-5

6G [11,15,16] and Rhodamine B [10,17]. Some carriers were used in solid phase extraction such as an organic soluble membrane filter [11]. In these reports, the sensitivity was given priority. On the other hand, collecting phosphate ion based on the formation of phosphomolybdate, requires a carrier, such as a hydrophobic sorbent [18] and ion-exchange resin [19].

There are ionic and nonionic forms of phosphomolybdate in the acidic reaction medium. With the former method, the nonionic form of phosphomolybdate was absorbed onto a hydrophobic sorbent such as silica-based C-18. For the determination of phosphate, phosphomolybdate absorbed onto sorbent was eluted with methanol or was directly optsensed in a specially designed flow cell. But the recovery of the nonionic form of phosphomolybdate was not satisfactory and one could not detect the phosphate if the absolute amount in the sample solution was less than 4 ng. The Simultaneous determination of phosphate and silicate was performed based on the difference in the production rate between phosphomolybdate and silicomolybdate. But the data analysis was very complicated.

With the latter method, the ionic form of phosphomolbdate was collected onto an anion-exchange resin. Because only phosphate ion was week absorbed by the resin, a molybdate form anion-exchange resin was used for the improvement of recovery and was able to be utilized for the separation of phosphate from the sample solution containing silicate based on the difference in the reaction rate.

For the selective determination of phosphate, because of the higher recovery, the molybdate-form anion-exchange resin was used prior to the hydrophobic sorbent such as silica-based C-18. When the molybdate-form anion-exchange resin was used for the sorbent of phosphate, the sensitivity was higher than the hydrophobic sorbent was used. Because an organic solvent such as methanol had to be used as the eluent when the hydrophobic sorbent was used, the anion-exchange resin employed as sorbent provides a cleaner system. Therefore, we tried to develop a system for the collection of phosphate based on a molybdate-form anion-exchange resin in this paper.

Several alternative methods have also been developed for measuring low concentrations of phosphate in a matrix, including ion exchange chromatography [20,21], gas chromatography with the phosphine generation system [22,23], amperometric detection [24], fluorometry [11,15,16,25] and enzymatic reactions [26–34]. The conductivity detector used in ion chromatography was not sensitive enough for the detection of phosphate and unsuitable for the quantitation of phosphate in natural water samples. The flame photometric detector (FPD) used in gas chromatography was sensitive and had a wide dynamic range for the detection of phosphine. However, generating phosphine was troublesome, because this reaction does not proceed in an aqueous solution and requires dry conditions. This means that the drying and phosphine generation step must be combined before the gas chromatographic sample injection [22,23]. The enzymatic method for the determination of phosphate was the most selective and relatively sensitive compared with other techniques and it has been utilized in clinical and pharmaceutical analyzes. But it is not stable for routine analysis in industrial applications.

Fluorometric methods for measuring phosphate have been proposed to improve sensitivity and selectivity compared with the molybdenum blue method. Most of these techniques are based on the fluorescence quenching reaction between phosphate and a cationic surfactant used as a fluorescence reagent [16,25]. Although a few had a higher sensitivity than the molybdenum blue method, they required time consuming processes such as preconcentration and separation procedures for the determination of phosphate by flotation [15] or collection on a membrane filer [11].

In this study, we tried to develop an automated flow injection system for measuring the concentration of phosphate based on the fluorescence quenching reaction between Rhoadamine 6G (see Fig. 1) and phosphomolybdate with a preconcentration column, which was packed with a molybdate-form ion exchange resin in order to collect and preconcentrate the phosphate in a sample solution. To date, Rhodamine 6G has been used as an ion-associated cationic surfactant for the quantification of phosphate ion by fluorophotometry

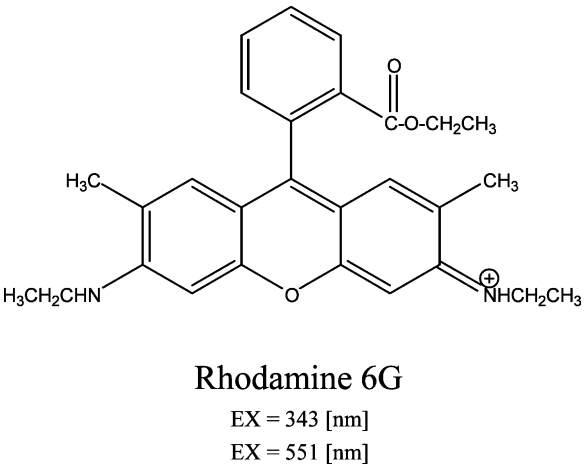

Fig. 1. Structure of Rhodamine 6G.

[11,15]. Some preconcentration and collection methods are based on this phenomenon, but it makes sense not to directly apply for this reagent in the flow injection system due to the gradual decrease in background fluorescence intensity. However, this reagent was suitable for the determination of phosphate using a flow injection system, because the reaction between Rhodamine 6G and phosphomolybdate is fast and does not require heat. Therefore, for the construction of a stable flow injection system based on this reaction, an aqueous methanol solution was used as a cleaning reagent to overcome the precipitation of ion-associated complexes between Rhodamine 6G and phosphomolybdate or molybdate. Moreover, for the preconcentration and collection of the phosphate ions in the water sample, a preconcentration column, packed with a molybdate-form ion exchange resin, was combined with the proposed flow injection system and applied to natural water samples containing low concentrations of phosphate. This paper may is first to report the use of a molybdate form anion exchange column for repeatedly collecting of phosphate in a sample solution, directly combined with the detection step.

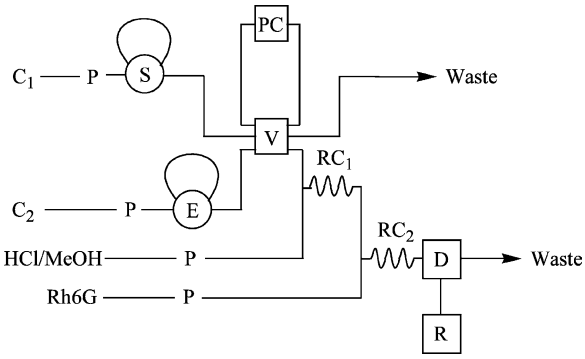

Fig. 2. Scheme of the FIA system for the measuring concentration of phosphate. C_1 and C_2, Carrier 1 and 2 (0.1 mol dm^{-3} acetate buffer (pH 3.0) and H_2O, respectively); HCl/MeOH, 2.0 mol dm^{-3} HCl:methanol = 1:1; Rh6G, Rhodamine 6G solution (30 μmol dm^{-3} Rhodamine 6G/H_2O:methanol = 1:4); P, pump (0.5 cm^3 min^{-1}); S, sample injector (4.0 cm^3); E, eluent injector (2.5 cm^3); RC_1 and RC_2, reaction coil 1 and 2 (0.3 and 0.1 cm^3, respectively); PC, preconcentration column (about 1.0 g of Amberlite CG-400); D, fluorometric detector (EX = 343 nm, EM = 551 nm); R, $X-Y$ recorder; V, valve.

2. Experimental

2.1. Apparatus

For fluorometric measurements, a Shimadzu RF-550 spectrofluorometer equipped with a quartz flow cell (12 μl) was used; the fluorescence intensity was recorded with a Pantos Unicorder C-228 recorder. For pH measurements, a TOA Electronics (Model HM-30S) pH meter was used. In the flow injection system shown in Fig. 2, four double-plunger minichemical pumps (Nihon Seimitsu Kogyo, NP-FX-3U) were used to transfer the carrier and reagent solution. Rheodyne 7125 was used as a sample injector and an eluent injector. A six-way valve was used for switching the carrier flow line from the phosphate preconcentration line to the phosphomolybdate elution line. The preconcentration column in Fig. 2 was prepared by packing Amberlite CG 400 (200–400 mesh, OH form) in a plastics mini column (5.0 mm i.d., 50 mm length).

2.2. Reagents

All reagents used were of analytical grade and all water used was deionized with the Milli Q reagent water system (Millipore).

Rhodamine 6G stock solution (4×10^{-3} mol l^{-1}). The first 0.20 g of Rhodamine 6G (Wako Pure Chemical Co. Ltd.) was dissolved in 0.1 l of water. To make a working solution, 1.50 ml of the stock solution was diluted to 0.20 l with an aqueous methanol solution (H_2O:methanol = 1:4) (30 μmol l^{-1} Rhodamine 6G/aqueous methanol solution (H_2O:methanol = 1:4)).

Ammonium molybdate stock solution (50 mmol l^{-1}). The first 12.359 g of $(NH_4)_6Mo_7O_{24}\cdot 4H_2O$ was dissolved in 0.2 dm^{-3} of water. A solution was prepared to change the anion exchange resin from the OH form to the molybdate form. To make a reforming solution, 2.0 ml of the ammonium molybdate stock solution was diluted to a concentration of 0.20 l with water (0.5 mmol l^{-1} Mo). Then, 4.0 ml of reforming solution was injected into the sample injector, which was sent to the anion exchange column through the valve.

To prepare the methanol-containing HCl solution, 0.1 l of 2.0 mol l^{-1} HCl solution and 0.1 l of methanol were mixed in equal volumes (2.0 mol l^{-1} HCl:methanol = 1:1).

To prepare the acetate buffer solution, 0.1 mol l^{-1} of acetic acid solution and 0.1 mol l^{-1} of sodium acetate solution, were made individually, and then mixed to adjust the pH to 3.0.

Phosphorus standard stock solution (1000 mg l^{-1}). Exactly 0.4389 g of KH_2PO_4 (dried at 105–110 °C for 4 h) was dissolved in water and diluted in a 0.10 l volumetric flask. Phosphorus working solutions were prepared by diluting the stock solution with a 0.1 mol l^{-1} acetate buffer solution (pH 3).

2.3. Procedure

The systems used in this study are shown in Fig. 2 and the optimized parameters are summarized in Table 1. An aliquot of sample solution (in which the sample volume was less than 20 ml, absolute amount of phosphorus was below 1.6 μg, and pH was adjusted with the 0.1 mol l^{-1} acetic acid solution), was injected into the 0.1 mol l^{-1} acetic acid carrier stream (C_1) through the sample injector. The sample solution was sent to the molybdate-form preconcentration column through the six-way valve to collect the phosphate ions in the sample solution. According to the concentration of phosphate in the solution, the sample collection step was repeated up to five-times. After sample collection, the six-way valve was turned to the eluent position and 2.5 ml of 0.5 mol l^{-1} sodium hydroxide was injected into the eluent carrier stream (C_2) to elute the phosphomolybdate from the column by the dissociation of the phosphomolybdate based on the anion exchange reaction. The eluent solution was mixed with a methanol-containing HCl solution, which was methanol mixed with 2.0 mol l^{-1} hydrochloric acid (1:1), to form phosphomolybdic acid in reaction coil 1. The mixed stream was merged with a 30 μmol l^{-1} Rhodamine 6G/aqueous methanol solution (H_2O:methanol = 1:4) in reaction coil 2 to form an ion-associated complex between phosphomolybdate and Rhodamine 6G. In the fluorescence detector, a decrease in the fluorescence intensity of Rhodamine 6G (EX = 343 nm, EM = 551 nm) was recorded as a negative

Table 1
Optimum conditions for the FIA system

Carrier 1	0.1 mol l^{-1} acetate buffer (pH 3.0)	0.5 ml min^{-1}
Carrier 2	H_2O	0.5 ml min^{-1}
HCl/MeOH	2.0 mol l^{-1} HCl:methanol = 1:1	0.5 ml min^{-1}
Rh6G	30 μmol l^{-1} Rhodamine 6G/H_2O:methanol = 1:4	0.5 ml min^{-1}
Preconcentration	i.d. 5.0 mm length 50 mm	2.5 ml
Column	About 1.0 g of Amberlite CG 400 was packed	
Reaction coil 1	i.d. 0.5 mm	0.3 ml
Reaction coil 2	i.d. 0.5 mm	0.1 ml
Fluorometric detector	EX = 343 nm, EM = 551 nm	
Sample	0.1 mol l^{-1} acetic acid solution	4.0–20.0 ml
Eluent	0.5 mol l^{-1} NaOH	2.5 ml

peak from the background fluorescence intensity. The calibration curve was plotted as the depth of the negative peak from the background intensity versus the absolute amount of phosphorus in the sample solution.

3. Results and discussion

3.1. Optimization of FIA parameters

3.1.1. On-line collection and preconcentration of phosphate

Characteristic of the proposed FIA system, the preconcentration column packed with an ion exchange resin for the collection of phosphate ions in the sample solution was directly combined with the fluorimetric determination system. Given the poor adsorptivity of the phosphate ion, it was difficult to collect this ion directly onto the anion exchange resin. But when the resin had adsorbed the molybdate ion before collection of the phosphate ion, the phosphate ion was collected quantitatively onto the molybdate-form ion exchange resin (Amberlite CG400). Therefore, a column packed with the molybdate-form ion exchange resin was combined with the fluorimetric determination system.

In the FIA system, the preconcentration column had to collect phosphate ion, which then, had to be eluted for the determination. When the phosphate ion adsorbed by the resin was eluted, the molybdate ion was simultaneously eluted by the eluent. Therefore, the column was packed with normal anion exchange resin and was changed to the molybdate form by the injection of a reforming solution, which contained molybdate ion, before the collection of phosphate ion. In the reforming solution, the concentration of molybdate was investigated. When the concentration of molybdate contained in the reforming solution was over 0.2 mmol l^{-1}, 1.6 μg of phosphorus was quantitatively collected onto the preconcentration column. For the optimum procedure, 4.0 ml of 0.5 mmol l^{-1} molybdate solution was used as the reforming solution.

For the quantitative collection of phosphate ions in a sample solution onto the molybdate-form ion exchange column, the effect of the sample pH was studied. The pH was adjusted between 1 and 5 using 0.1 mol l^{-1} acetate buffer solution as solvent. The recovery of phosphate ion was quantitatively determined in this pH range so that the sample was prepared with 0.1 mol l^{-1} acetic acid before the injection into the preconcentration column. The pH of this solution was about 3.

Elution was based on the ion exchange reaction and so sodium hydroxide was used as eluent. However, the fluorescence of Rhodamine 6G was influenced by pH. The concentration of sodium hydroxide was influenced markedly by the fluorescence intensity. When the concentration was below 0.4 mol l^{-1}, phosphate ion remained in the column. On the other hand, when the concentration of sodium hydroxide was above 0.8 mol l^{-1}, strong blank signals were observed with an excess amount of sodium hydroxide. Therefore, 2.5 ml of 0.5 mol l^{-1} sodium hydroxide was used as eluent.

In our proposed system, the phosphate ions in the sample solution were collected in the preconcentration column as phosphomolybdate and so a molybdate stream was not necessary in the fluorimetric detection system. However, the reaction between phosphomolybdate and Rhodamine 6G was performed in acidic medium and an ion-associated complex between molybdate and Rhodamine 6G or phosphomolybdate and Rhodamine 6G was produced in the flow line and was precipitated onto the PTFE tube wall and the fluorimetric detection cell without organic solvent. Therefore, a methanol-containing hydrochloric acid solution was necessary for the detection. From the investigation of the concentration of hydrochloric acid and ratio of methanol to hydrochloric acid solution, a mixture of 2.0 mol l^{-1} hydrochloric acid:methanol = 1:1 was used for the reagent stream.

From the comparison of Rhodamine B and Rhodamine 6G, which possessed a similar structure, fluorescent characteristics, and reaction mechanism to phosphomolybdate, Rhodamine B was possessed a greater mole fluorescent intensity than Rhodamine 6G. But when the system included Rhodamine B as fluorescent reagent, blank signals were stronger than in the system with Rhodamine

6G as fluorescent reagent. And the determination range of phosphate in the former system was narrower than that obtained from the latter system. Therefore, in this paper, Rhodamine 6G was chosen as a fluorescent reagent.

The effect of the concentration of Rhodamine 6G was indicated in Fig. 3. A constant peak depth was observed at concentrations of Rhodamine 6G over 20 μmol l^{-1}. In this concentration range, although the background fluorescence intensity was increased, the sensitivity was constant. Therefore, the concentration of Rhodamine 6G was set at 30 μmol l^{-1}. An aqueous methanol solution was used as the solvent for Rhodamine 6G to stabilize the system. Below a ratio of water to methanol of 1:4, the sensitivity decreased with the ratio of ethanol in the Rhodamine 6G solution. Above this, bubbles were generated in the flow line by the heat of hydrolysis and were caused large noises. Therefore, the ratio of water to methanol in the solvent of Rhodamine 6G was set at 1:4.

For the preconcentration of phosphate in a sample solution, the effect of the sample volume on the recovery of phosphate was investigated. In this examination, the absolute amount of phosphorus in the sample solution was fixed at 0.8 μg. the recovery was constant in the range of sample volumes between 4.0 and 20.0 ml, as shown in Fig. 4. But the recovery was influenced by carrier flow rate. At a carrier flow rate above 0.5 ml min^{-1}, the reaction time between phosphate ions in the sample solution and molybdate adsorbed by the resin was not long enough, and the recovery was slightly decreased. The carrier flow rate was set at 0.5 ml min^{-1}.

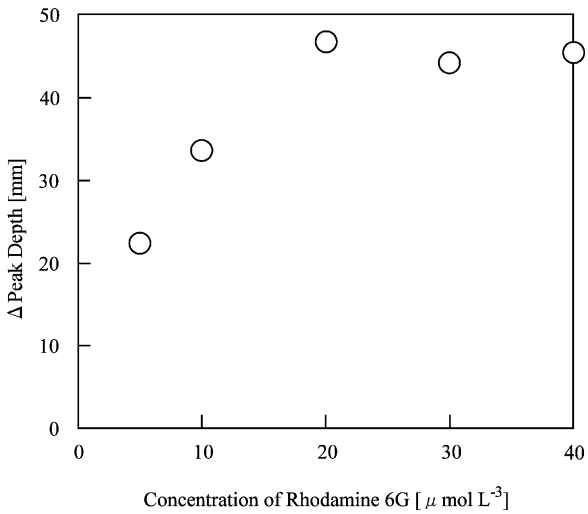

Fig. 3. Effect of the concentration of Rhodamine 6G in the system shown in Fig. 2. The Rh6G solution was prepared in a H_2O:methanol (1:1) solution. Other conditions were the same as in Fig. 2.

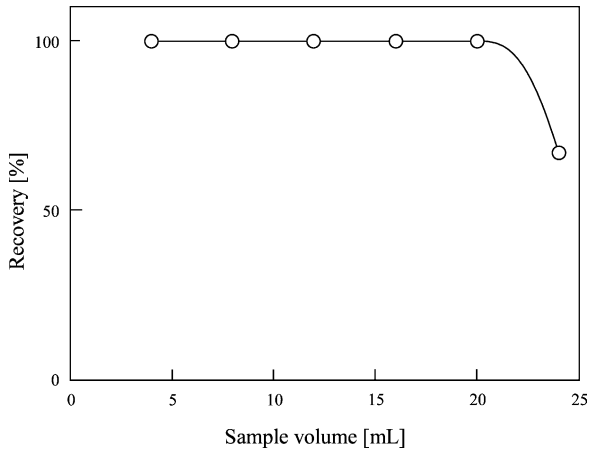

Fig. 4. Effect of sample volume on the measurement of phosphate in the system shown in Fig. 2. The absolute amount of phosphorus is fixed at 0.8 μg.

3.1.2. Calibration graph and accuracy

The signals obtained from the optimized system shown in Fig. 2 are shown in Fig. 5. In the blank, peak depth presented due to the difference of pH between the eluent and carrier solution and due to the concentration of the molybdate in the eluent that passed through the molybdate-form anion exchange preconcentration column. The calibration graph plotted the absolute amount of phosphorus in a sample solution versus the obtained peak depth. The linearity range of the calibration graph for phosphate using the system shown in Fig. 2 was from 1.6 to 0.2 μg. The relative standard deviation when the concentration of phosphate was 0.8 μg per 4 ml sample solution was below 1.5%. In consideration of the sample volume and a signal-to-noise ratio of 3, the determination limit for the concentration of phosphorus in the sample solution was between 10 μg l^{-1} (20.0 ml) and 50

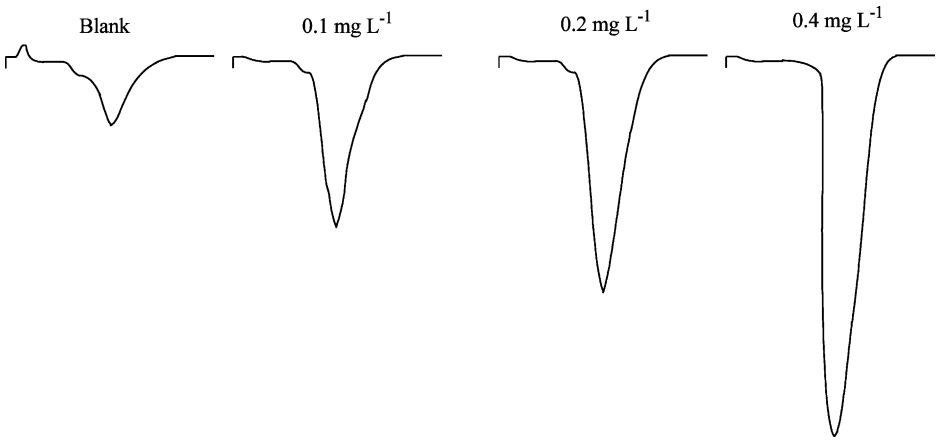

Fig. 5. FIA signals obtained from the system shown in Fig. 2.

μg l^{-1} (4.0 ml). The sensitivity was the same as with the molybdenum blue method.

3.1.3. Effect of interferences

Table 2 give a summary of the effects of interference in some water samples on the determination of phosphate. A recovery test for each foreign substance and ion in a standard phosphate solution was used. From this table, it is clear that these substances are not influenced for the collection and determination in this system. In some papers, silicate ion was reported to have a severe influence on phosphate determination. But the reaction between Rhodamine 6G and phosphomolybdate was not influenced by this ion [15]. The effect of the silicate ion was not examined in this paper.

3.1.4. Application to water samples

Given the results of the effect on other substances and ions, the proposed method was applied to the determination of phosphate in two samples; a clean spring water sample and a commercialized mineral water sample.

The analytical results were obtained with the standard addition method. The absolute amount of phosphorus in the commercialized mineral water and spring water was 0.204 μg per 4.0 ml

Table 2
Effect of interference on the measurement of phosphate with a preconcentration system

	Concentration (mg l^{-1})	Relat.		Concentration (mg l^{-1})	Relat.
Na^+	1000	99.9	Cl^-	1000	100.6
K^+	1000	98.4	F^-	1000	101.9
NH_4^+	1000	96.8	Br^-	1000	97.1
Ca^{2+}	1000	92.9	NO_3^-	1000	99.0
	100	96.4	CO_3^{2-}	1000	96.0
Mg^{2+}	1000	96.8	SO_4^{2-}	1000	92.7
Cu^{2+}	1000	92.0		100	95.0
	100	96.4	BO_3^{3-}	1000	83.0
Co^{2+}	1000	83.2		100	104.9
	100	98.2			
$A1^{3+}$	100	75.7			
	10	98.6			
Fe^{3+}	100	214.4			
	10	103.9			

Addition of 0.2 mg l^{-1} phosphate.

for a 10-fold diluted sample solution and 0.183 μg per 4.0 ml for a 2-fold diluted sample solution, respectively. The concentrations of these samples were 0.51 and 0.09 mg l^{-1}, respectively. These values were consistent with the results obtained with the molybdenum blue method [35].

References

[1] O. Broberg, K. Pettersson, Hydrobiologia 170 (1988) 45.
[2] I.D. McKelvie, B.T. Hart, T.J. Cardwell, R.W. Cattrall, Analyst 114 (1989) 1459.
[3] M.D. Ron Vaz, A.C. Edwards, C.A. Shand, M. Cresser, Talanta 39 (1992) 1479.
[4] I.D. McKelvie, B.T. Hart, T.J. Cardwell, R.W. Cattrall, Talanta 40 (1993) 1981.
[5] K. Higuchi, H. Tamanouchi, S. Motomizu, Anal. Sci. 14 (1998) 941.
[6] R.L. Benson, Y.B. Truong, I.D. McKelvie, B.T. Hart, Water Res. 30 (1996) 1959.
[7] H.-J. Heckemann, Anal. Chim. Acta 410 (2000) 177.
[8] S.J. Chalk, J.F. Tyson, Talanta 41 (1994) 1797.
[9] S. Motomizu, T. Wakimoto, K. Toei, Talanta 31 (1984) 235.
[10] G.F. Kirkbright, R. Narayanaswamy, T.S. West, Anal. Chem. 43 (1971) 1434.
[11] M. Kan, T. Nasu, M. Taga, Anal. Sci. 7 (1991) 87.
[12] J.P. Susanto, M. Oshima, S. Motomizu, H. Mikasa, Y. Hori, Analyst 120 (1995) 187.
[13] S. Motomizu, T. Wakimoto, K. Toei, Talanta 30 (1983) 333.
[14] A.G. Fogg, S. Soleymanloo, D.T. Burns, Anal. Chim. Acta 88 (1977) 197.
[15] M. Taga, M. Kan, T. Nasu, Fresenius Z. Anal. Chem. 334 (1989) 45.
[16] W. Fusheng, W. Zhongxiang, T. Enjiang, Anal. Lett. 22 (1989) 3081.
[17] T. Nasu, H. Minami, Analyst 114 (1989) 955.
[18] N. Lacy, G.D. Christian, J. Ruzicka, Anal. Chem. 62 (1990) 1482.
[19] T. Kubota, T. Okutani, Bunseki Kagaku 39 (1990) 507.
[20] D.J. Halliwell, I.D. McKelvie, B.T. Hart, R.H. Dunhill, Analyst 121 (1996) 1089.
[21] M. Colina, P.H.E. Gardiner, J. Choromatogr. A 847 (1999) 285.
[22] S. Hashimoto, K. Fujiwara, K. Fuwa, Limnol. Oceanogr. 32 (1987) 729.
[23] S. Hashimoto, K. Fujiwara, K. Fuwa, Anal. Chem. 57 (1985) 1305.
[24] S. Hinkamp, G. Schwedt, Anal. Chim. Acta 236 (1990) 345.
[25] E. Diacu, P.C. Ioannou, C.K. Polydorou, C.E. Efstathiou, Analyst 120 (1995) 2613.
[26] R.J. Stevens, Water Res. 13 (1979) 763.
[27] K. Petterson, Int. Reven Ges. Hydorbiol. 64 (1979) 585.
[28] J.P.J. Ungerer, H.M. Oosthuizen, S.H. Bissbort, Clin. Chim. Acta 223 (1993) 149.
[29] Y. Shan, I.D. McKelvie, B.T. Hart, Anal. Chem. 65 (1993) 3053.
[30] H. Mori, M. Kogure, S. Kawamata, A. Nagamoto, H. Yamamoto, Anal. Lett. 27 (1994) 309.
[31] M.D. Luque de Castro, R. Quiles, J.M. Fernandez-Romero, E. Fernandez, Clin. Chem. 41 (1995) 99.
[32] I.D. McKelvie, B.T. Hart, T.J. Cardwell, R.W. Cattrall, Anal. Chim. Acta 316 (1995) 277.
[33] H. Mori, M. Kogura, H. Takei, H. Yamamoto, Anal. Sci. 12 (1996) 137.
[34] H. Nakamura, H. Tanaka, M. Hasegawa, Y. Masuda, Y. Arikawa, Y. Nomura, K. Ikebukuro, I. Karube, Talanta 50 (1999) 799.
[35] M. Nishijima, H. Ide, Methods of Analysis in Health Science, Kanehara Press, Tokyo, 2000, p. 166.