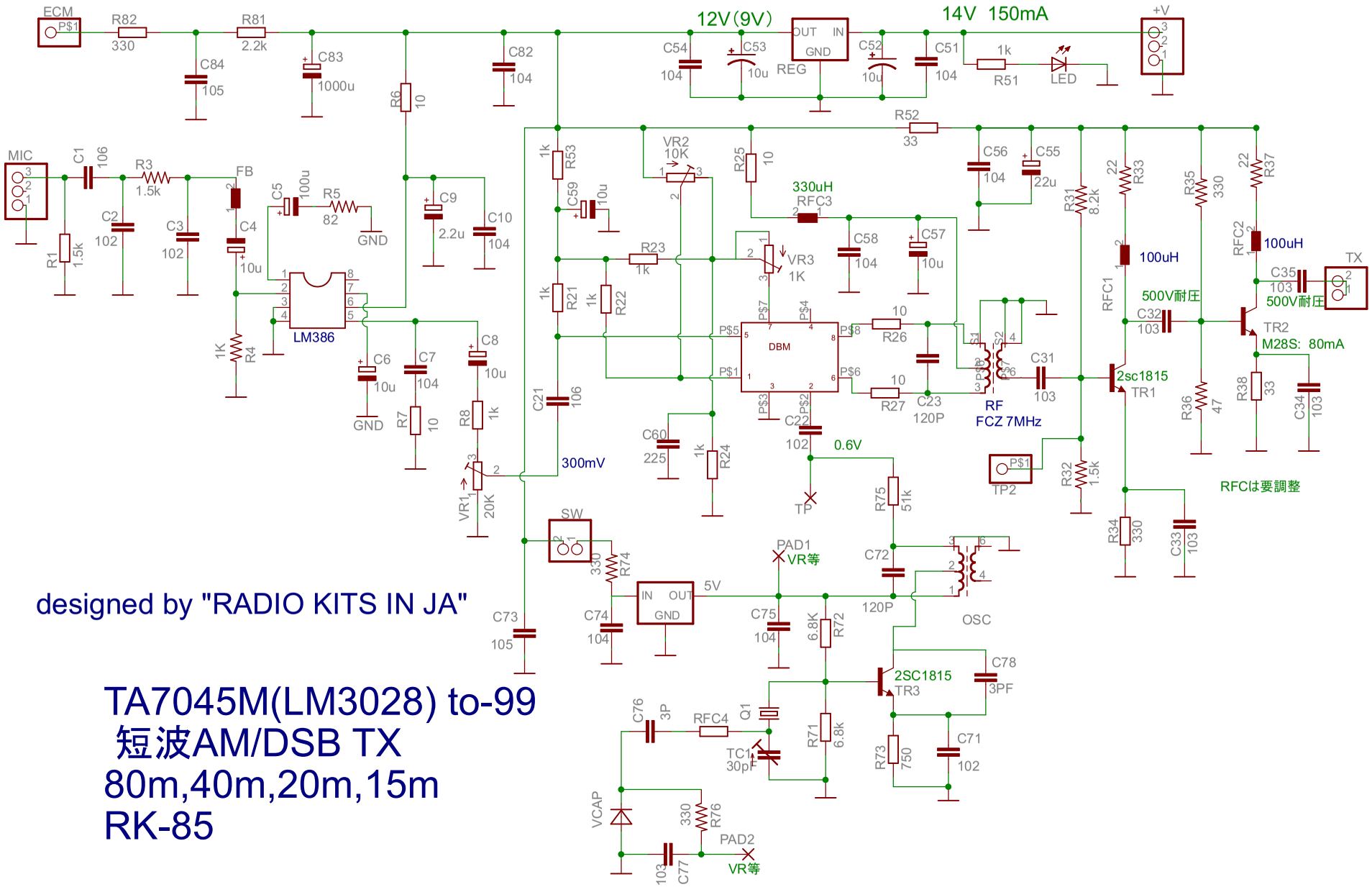

designed by "RADIO KITS IN JA"

TA7045M(LM3028) to-99
短波AM/DSB TX
80m,40m,20m,15m
RK-85