all right belongs to RADIO KITS IN JA

TIMER-VR=60K : 1sec as one shot time

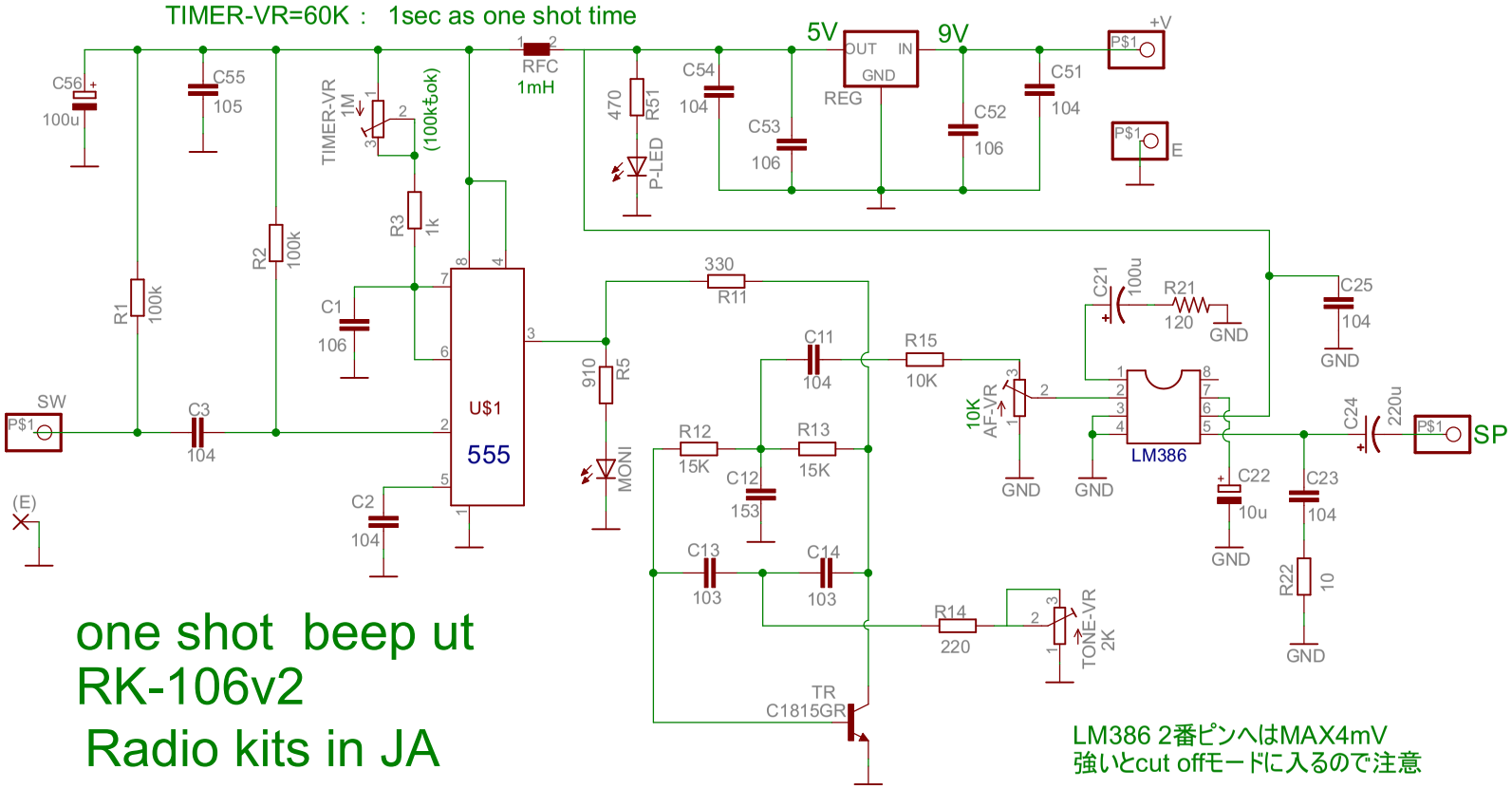

one shot beep ut
RK-106v2
Radio kits in JA

LM386 2番ピンへはMAX4mV
強いとcut offモードに入るので注意

R14+VR=1.5K tone=1.0KHz
R14+VR=820 tone=2.0KHz
R14+VR=270 tone=3.2KHz